metalmobil®

Abaco
design Metalmobil Concept

Freedom of composition
Abaco is an upholstered multiple seating system: poufs, sofas, corner units and wall panels are the units of a product at the service of design and creativity. Its linear and round modularity and its padded panels are a flexible and combinational system and its diverse available sizes allow to set up and decorate any type of environment.

The possibility to combine 3 colours for the upholstery of the base, of the seat and of the backrest as well as that of the wall panels creates elegant chromatic effects that allow the harmonization between the project and its setting.

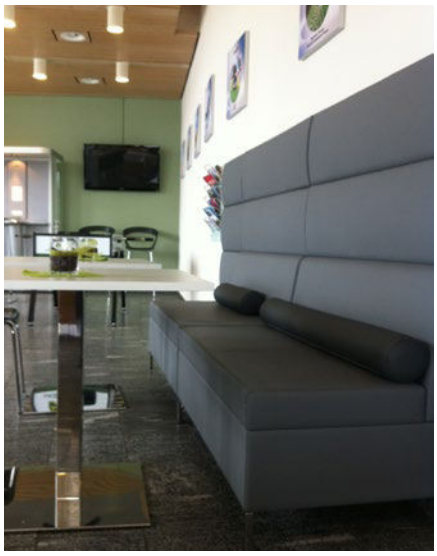

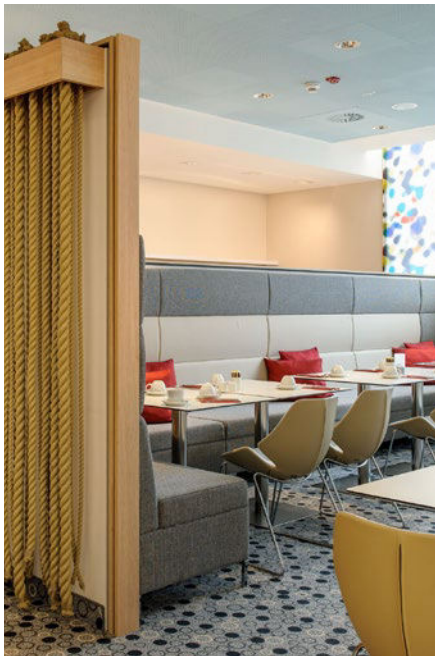

metalmobil®

Technical features

Customized upholstering possibility; seat backseat and base can be upholstered in different colour patterns.

Wall fixing system granting Abaco complete re-arrangement at eachoccasion.

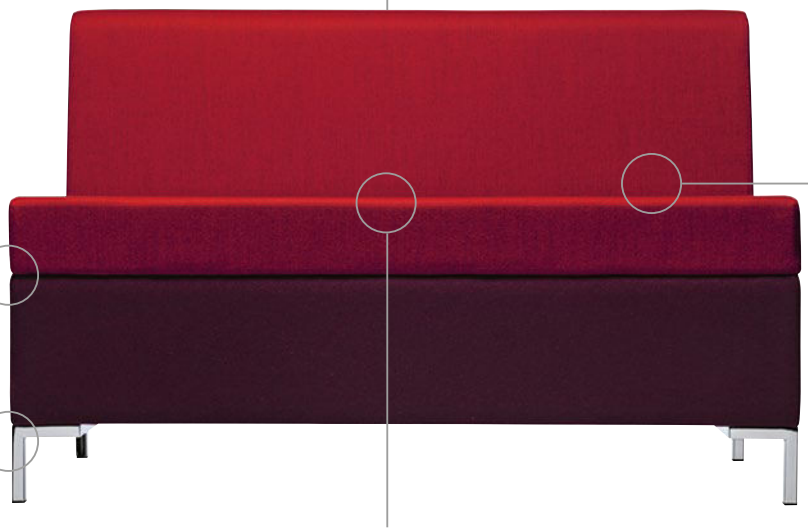

Attention to details: chromed or epoxy-coated feet (16 colour options available from catalogue) keep Abaco well off the ground allowing complete ease of clean.

Seat and backseat in foam.

Thanks to its dimensions and customizing qualities (with or without wall panel and modular elements) Abaco is the ideal tool for both dining and waiting areas.

metalmobil®

Technical features

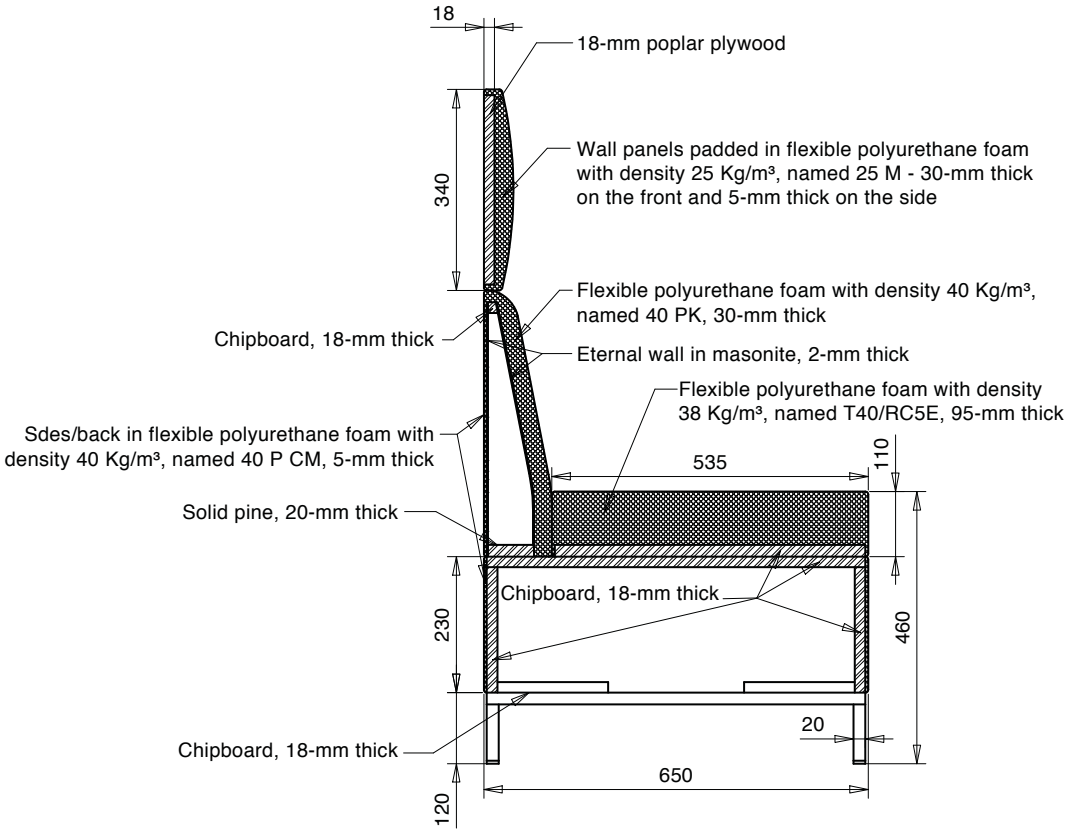

metalmobil®

The fixing system

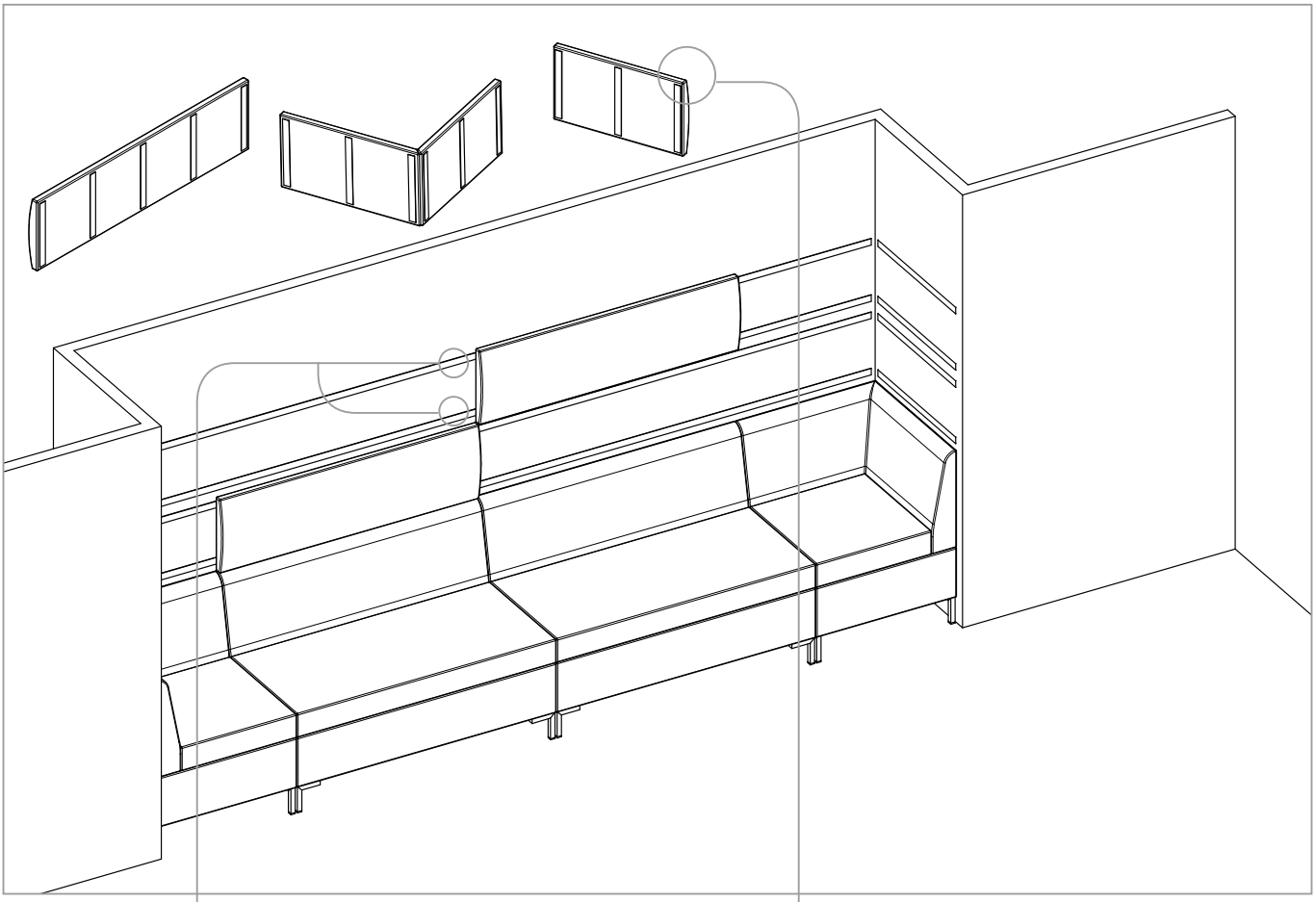

Adhesive Velcro stripes to be horizontally fixed onto the wall in proximity of the upper and lower edges of the upholstered panels.

The panels can be fixed onto the wall by means of Velcro vertical stripes stitched on their back.

A

B

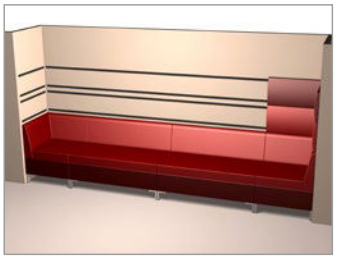

C

D

metalmobil®

Modularity

750

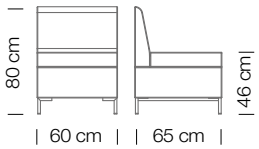

755

751

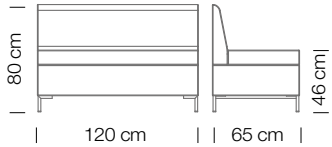

756

752

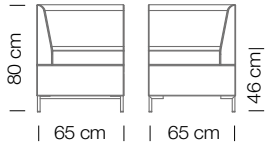

758

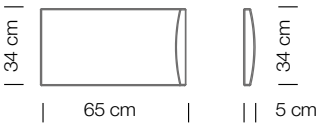

753

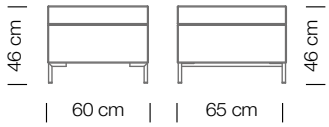

757

754

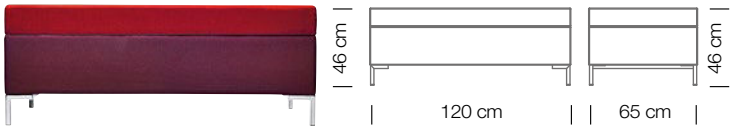

SEATING FINISHES

TE **FABRICS**

FRAME

AC **STEEL**

metalmobil®

Modularity

759 - 45°/C

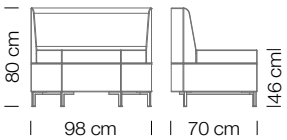

760 - 45°/A

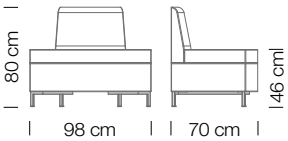

761 - 45°/A-C

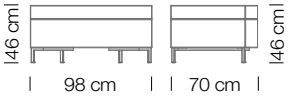

SEATING FINISHES

TE **FABRICS**

FRAME

AC **STEEL**

metalmobil®

Finishes

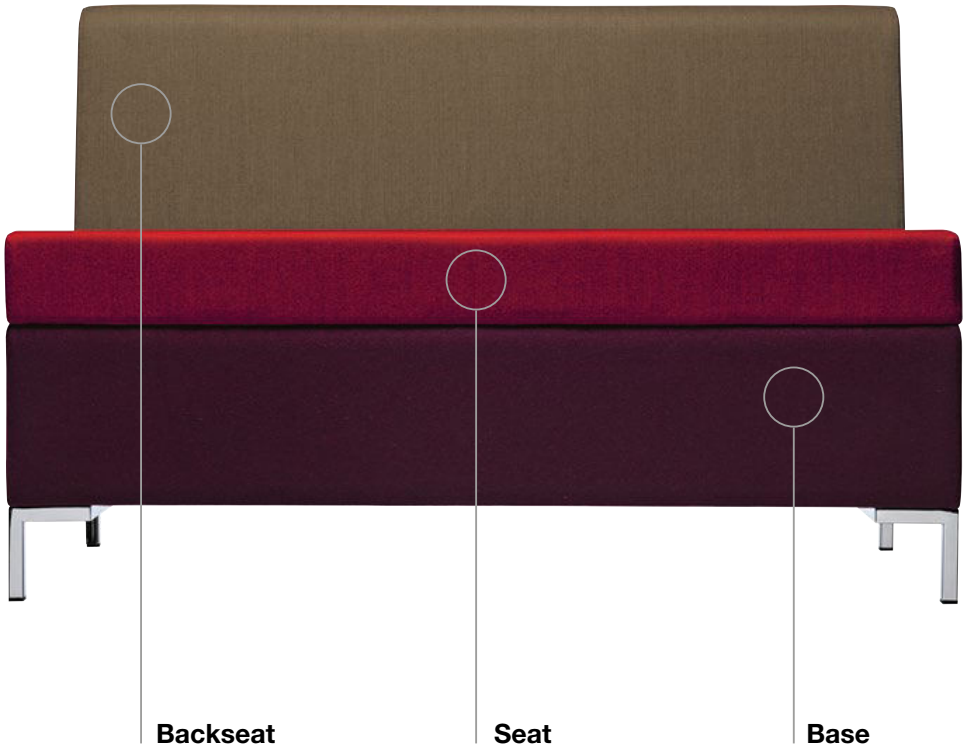

They can be upholstered
in 3 different colour pattering.

SEATING FINISHES

TE FABRICS

FRAME

AC STEEL

metalmobil®

TE Fabrics

A SALENTO

A NAPPA

B A511

B SKILL

B INCA

B FLIRT

E DIAMOND

B POLARIS PRO

G LAMA

E NORD WOOL

G SOLE CS

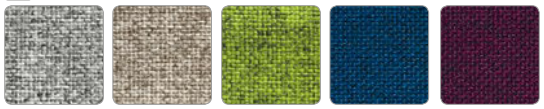

G PAROTEGA NF

metalmobil®

AC Steel

VR WHITE
RAL 9016

VR WHITE MARÉ
RAL 9010

VR IVORY RAL 9001

VR TURTLE DOVE
PANTONE 402C

ALUMINIUM
GREY RAL 9006

VR GREY RAL 7042

VR PEWTER
RAL 7042

VR ANTHRACITE
RAL 7016

VR BLACK RAL 9005

VR ORANGE RAL 2003

VR RED RAL 3000

VR RED MARÉ
RAL 3003

VR BROWN
RAL 8017

VR GREEN 367 C

VR ENGLISH GREEN
RAL 6005

CR CHROME

metalmobil.com
commerciale@metalmobil.com - export@metalmobil.com
Italia: +39 0721 203607 - Export: +39 0721 203601

Abaco

Abaco

Rdm

metalmobil

Abaco 750

ABACO COLLECTION:
Abaco 750, Abaco 751, Abaco 752, Abaco 753, Abaco 754, Abaco 755, Abaco 756, Abaco 757, Abaco 758, Abaco 759, Abaco 760, Abaco 761,

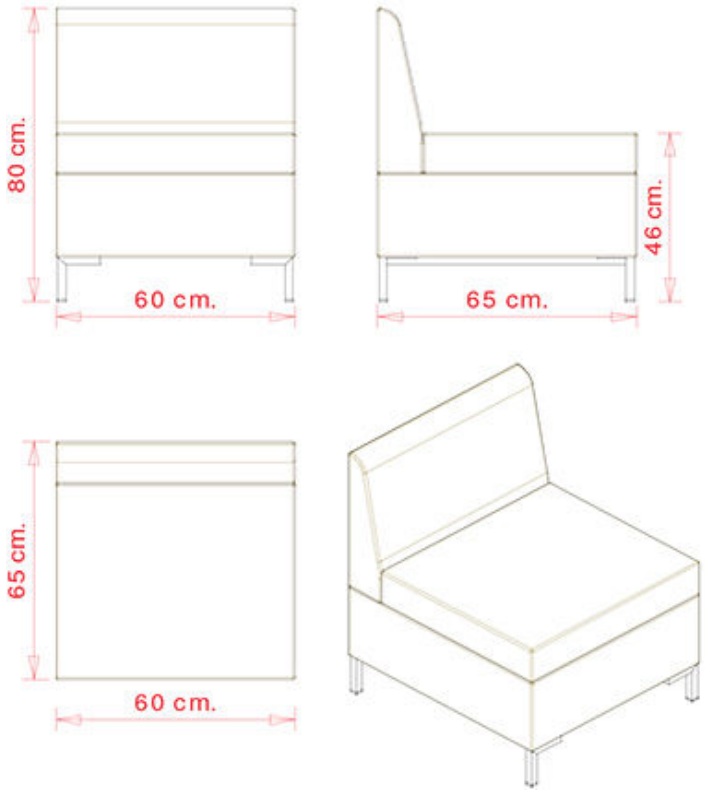

Modular seating system. Upholstered seat and back. Steel frame. Linear module L 60 cm.

WEIGHT	PACK	PIECES PER BOX
21 kg	0,35 m³	1

FINISHES SEATING

TE **FABRICS**

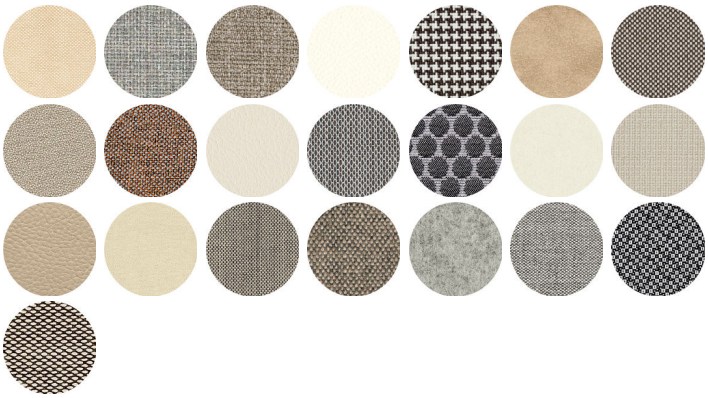

FRAMES

AC **STEEL**

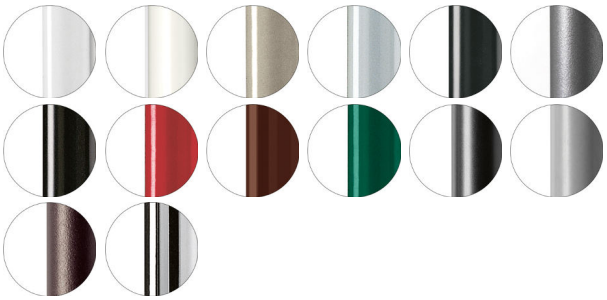

USES

coffee & restaurants, hotels, educational, entertainment, travel, office and waiting areas, retail, health care,

Abaco

Rdm

metalmobil

Abaco 751

ABACO COLLECTION:
Abaco 750, Abaco 751, Abaco 752, Abaco 753, Abaco 754, Abaco 755, Abaco 756, Abaco 757, Abaco 758, Abaco 759, Abaco 760, Abaco 761,

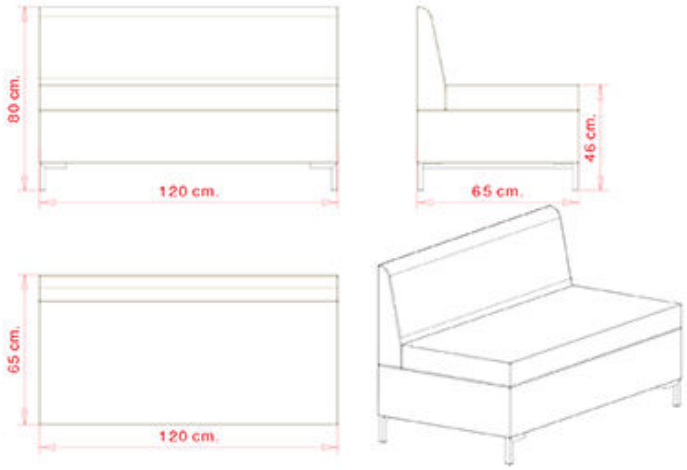

Modular seating system. Upholstered seat and back. Steel frame. Linear module L 120 cm.

WEIGHT	PACK	PIECES PER BOX
44 Kg	0,73 m³	1

FINISHES SEATING

TE FABRICS

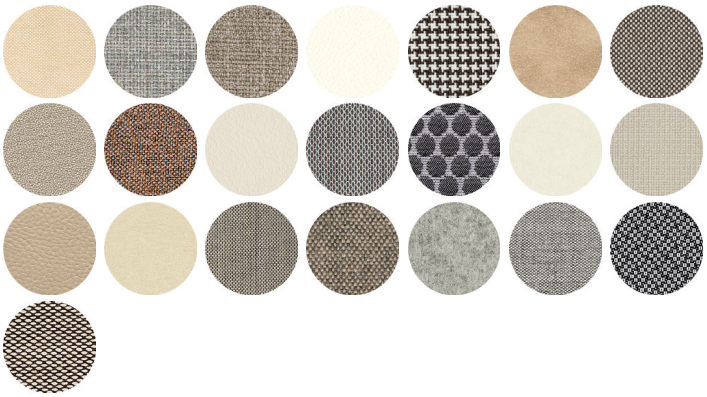

FRAMES

AC STEEL

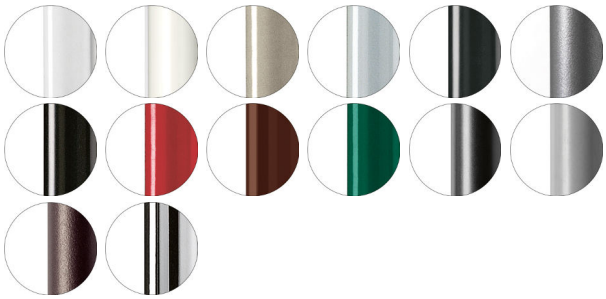

USES

coffee & restaurants, hotels, educational, entertainment, travel, office and waiting areas, retail, health care,

Abaco

Rdm

metalmobil

Abaco 752

ABACO COLLECTION:
Abaco 750, Abaco 751, Abaco 752, Abaco 753, Abaco 754, Abaco 755, Abaco 756, Abaco 757, Abaco 758, Abaco 759, Abaco 760, Abaco 761,

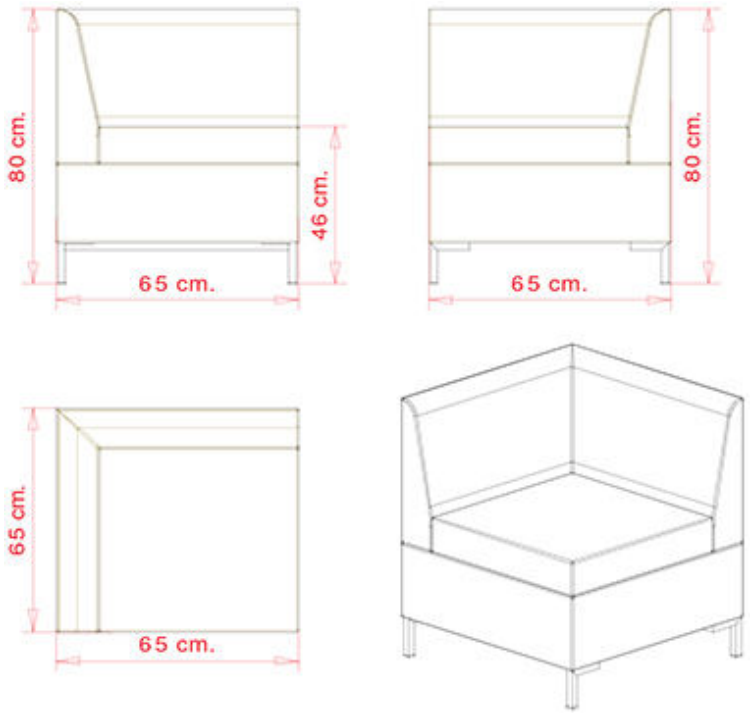

Modular seating system. Upholstered seat and back. Steel frame. Corner module.

WEIGHT	PACK	PIECES PER BOX
25 kg	0,38 m^3	1

FINISHES SEATING

TE FABRICS

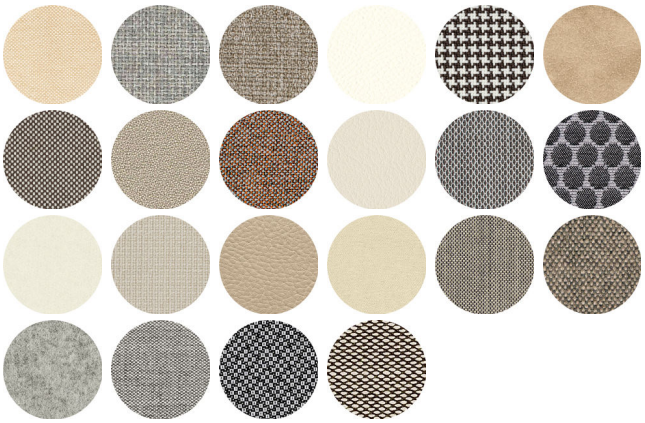

FRAMES

AC STEEL

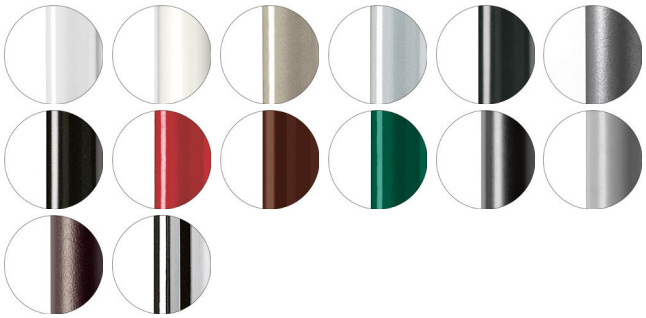

USES

coffee & restaurants, hotels, educational, entertainment, travel, office and waiting areas, retail, health care,

Abaco

Rdm

Abaco 753

ABACO COLLECTION:
Abaco 750, Abaco 751, Abaco 752, Abaco 753, Abaco 754, Abaco 755, Abaco 756, Abaco 757, Abaco 758, Abaco 759, Abaco 760, Abaco 761,

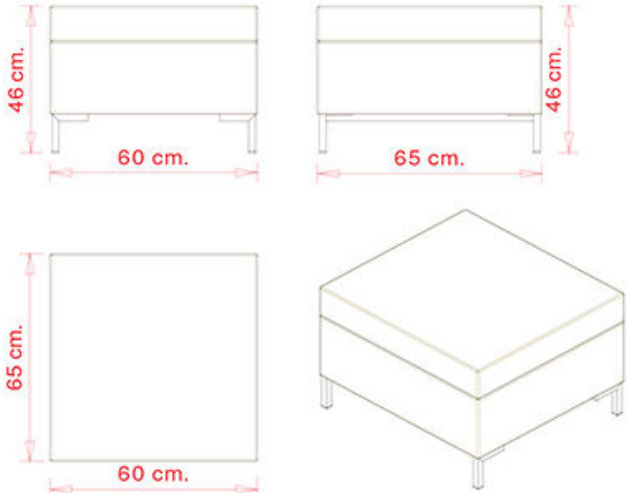

Modular seating system. Upholstered seat. Steel frame. Pouf module L 60 cm.

WEIGHT	PACK	PIECES PER BOX
15 kg	0,28 m³	1

FINISHES SEATING

TE FABRICS

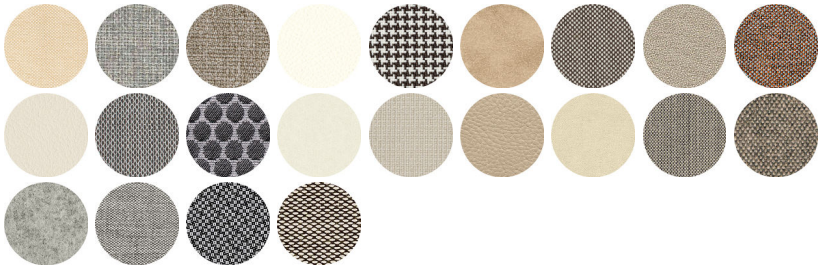

FRAMES

AC STEEL

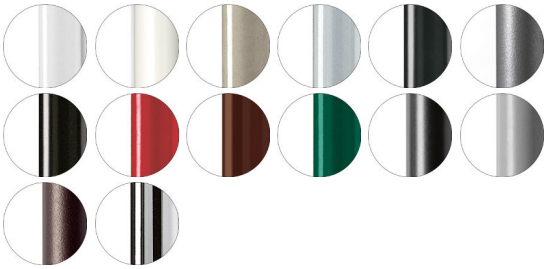

USES

coffee & restaurants, hotels, educational, entertainment, travel, office and waiting areas, retail, health care,

Abaco

Rdm

Abaco 754

ABACO COLLECTION:
Abaco 750, Abaco 751, Abaco 752, Abaco 753, Abaco 754, Abaco 755, Abaco 756, Abaco 757, Abaco 758, Abaco 759, Abaco 760, Abaco 761,

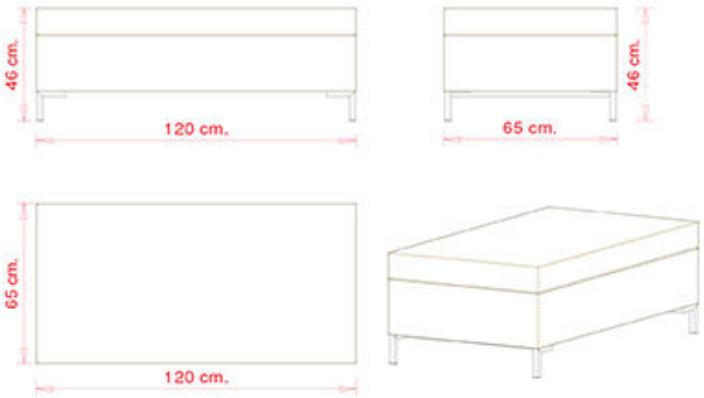

Modular seating system. Upholstered seat. Steel frame. Pouf module L 120 cm.

WEIGHT	PACK	PIECES PER BOX
34 kg	0,71 m³	1

FINISHES SEATING

TE FABRICS

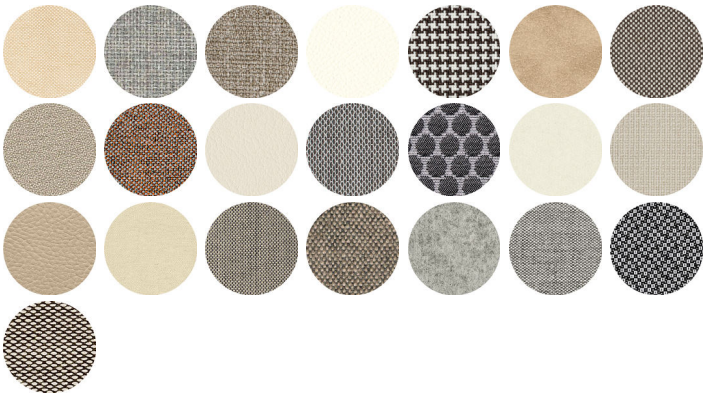

FRAMES

AC STEEL

USES

coffee & restaurants, hotels, educational, entertainment, travel, office and waiting areas, retail, health care,

Abaco

Rdm

metalmobil

Abaco 755

ABACO COLLECTION:
Abaco 750, Abaco 751, Abaco 752, Abaco 753, Abaco 754, Abaco 755, Abaco 756, Abaco 757, Abaco 758, Abaco 759, Abaco 760, Abaco 761,

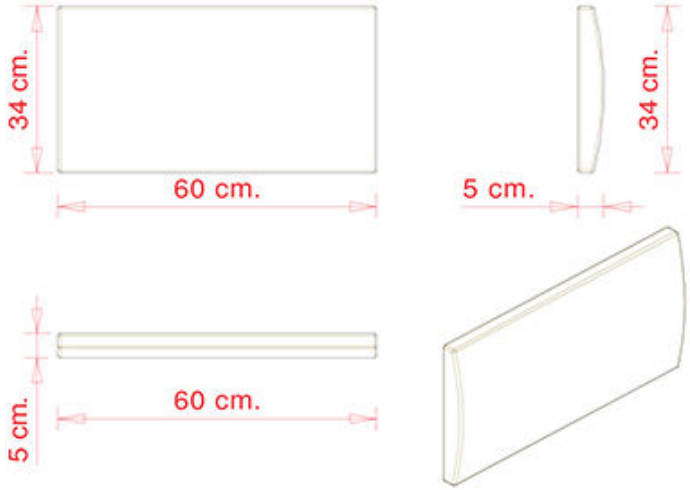

Modular seating system. Upholstered wall panel. Linear module L 60 cm.

WEIGHT	PACK	PIECES PER BOX
2 kg	0,18 m^3	4

FINISHES SEATING

TE **FABRICS**

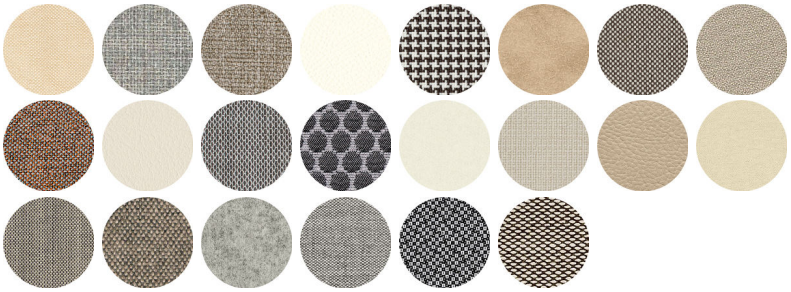

USES

coffee & restaurants, hotels, educational, entertainment, travel, office and waiting areas, retail, health care,

Abaco

Rdm

Abaco 756

ABACO COLLECTION:
Abaco 750, Abaco 751, Abaco 752, Abaco 753, Abaco 754, Abaco 755, Abaco 756, Abaco 757, Abaco 758, Abaco 759, Abaco 760, Abaco 761,

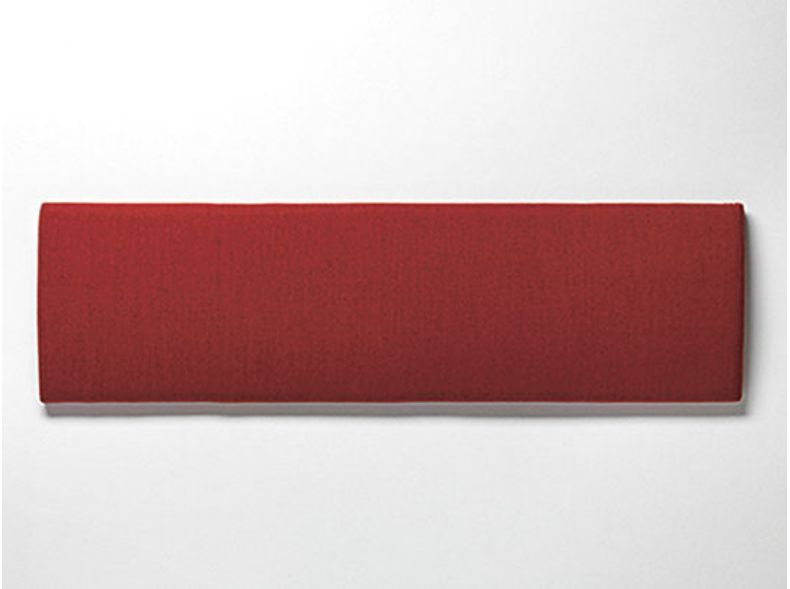

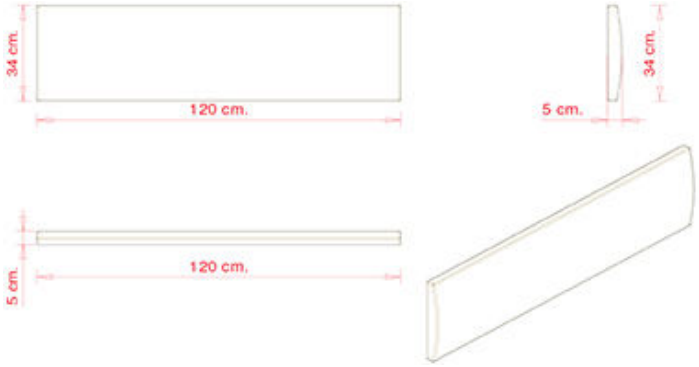

Modular seating system. Upholstered wall panel. Linear module L 120 cm.

WEIGHT	PACK	PIECES PER BOX
4 kg	0,18 m^3	4

FINISHES SEATING

TE **FABRICS**

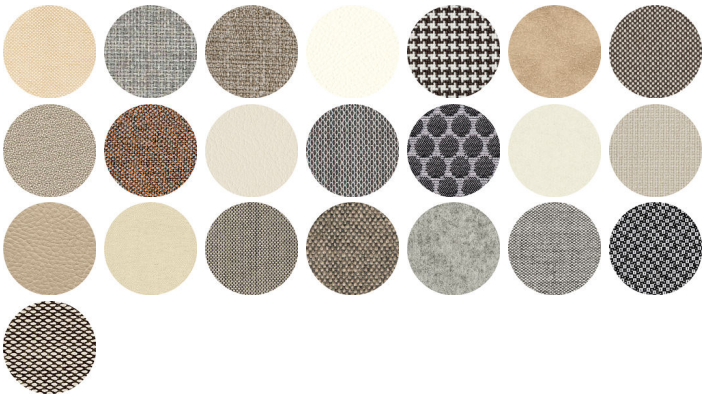

USES

coffee & restaurants, hotels, educational, entertainment, travel, office and waiting areas, retail, health care,

Abaco

Rdm

metalmobil

Abaco 757

ABACO COLLECTION:
Abaco 750, Abaco 751, Abaco 752, Abaco 753, Abaco 754, Abaco 755, Abaco 756, Abaco 757, Abaco 758, Abaco 759, Abaco 760, Abaco 761,

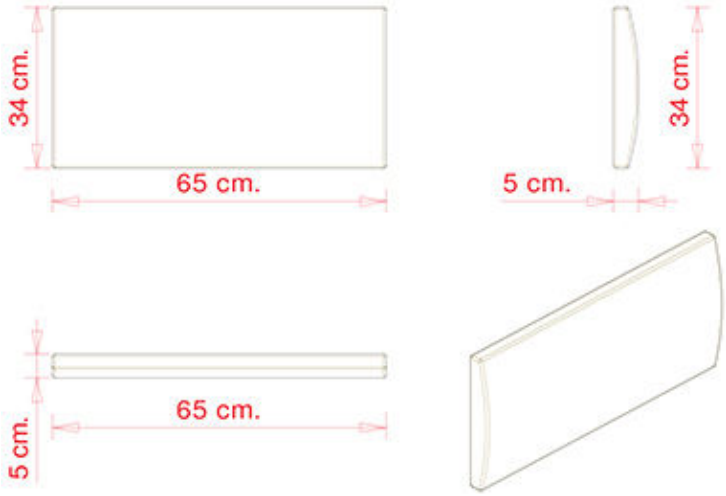

Modular seating system. Upholstered wall panel. Terminal corner module.

WEIGHT	PACK	PIECES PER BOX
2 kg	0,18 m^3	4

FINISHES SEATING

TE **FABRICS**

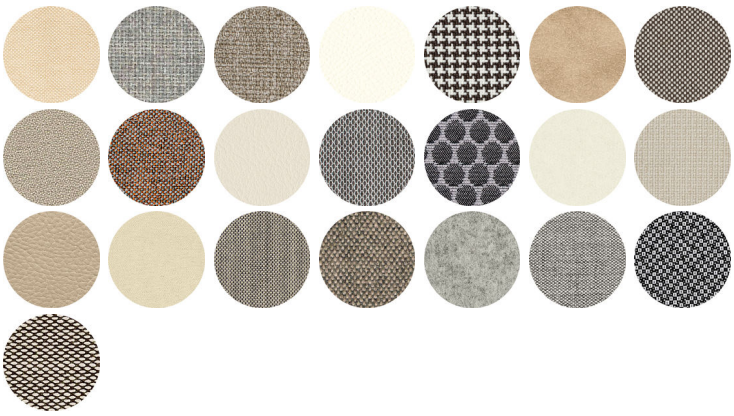

USES

coffee & restaurants, hotels, educational, entertainment, travel, office and waiting areas, retail, health care,

Abaco

Rdm

metalmobil

Abaco 758

ABACO COLLECTION:
Abaco 750, Abaco 751, Abaco 752, Abaco 753, Abaco 754, Abaco 755, Abaco 756, Abaco 757, Abaco 758, Abaco 759, Abaco 760, Abaco 761,

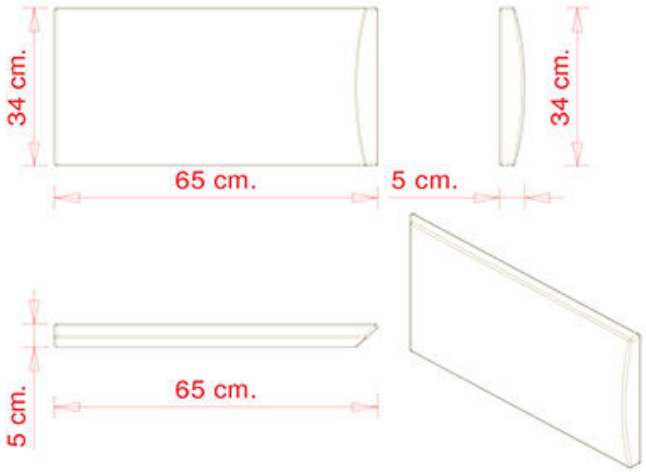

Modular seating system. Upholstered wall panel. Corner module (2 pieces).

WEIGHT	PACK	PIECES PER BOX
4 kg	0,18 m	2

FINISHES SEATING

TE **FABRICS**

USES

coffee & restaurants, hotels, educational, entertainment, travel, office and waiting areas, retail, health care,

Abaco

Rdm

metalmobil

Abaco 759

ABACO COLLECTION:
Abaco 750, Abaco 751, Abaco 752, Abaco 753, Abaco 754, Abaco 755, Abaco 756, Abaco 757, Abaco 758, Abaco 759, Abaco 760, Abaco 761,

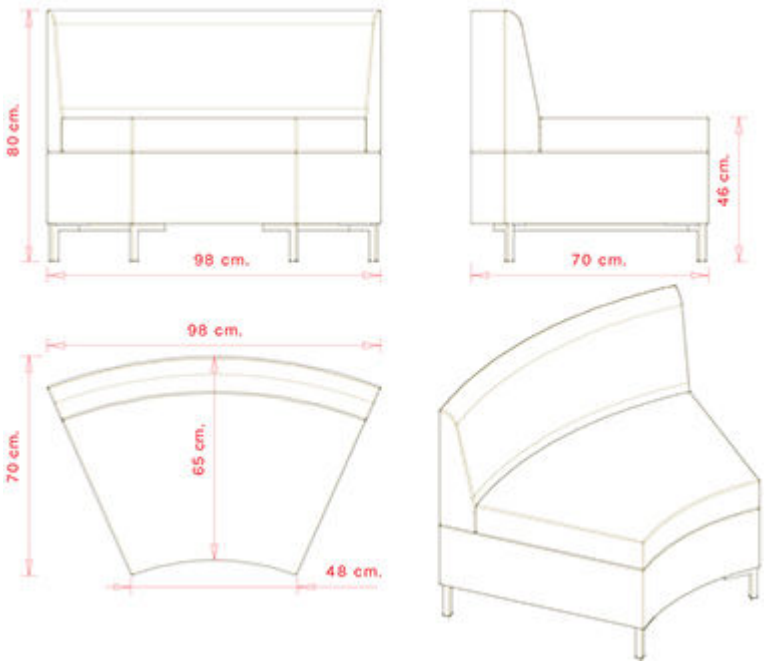

Modular seating system. Upholstered seat and back. Steel frame. Curved module 45° closed.

WEIGHT	PACK	PIECES PER BOX
29 Kg	0,60 m^3	1

FINISHES SEATING

TE FABRICS

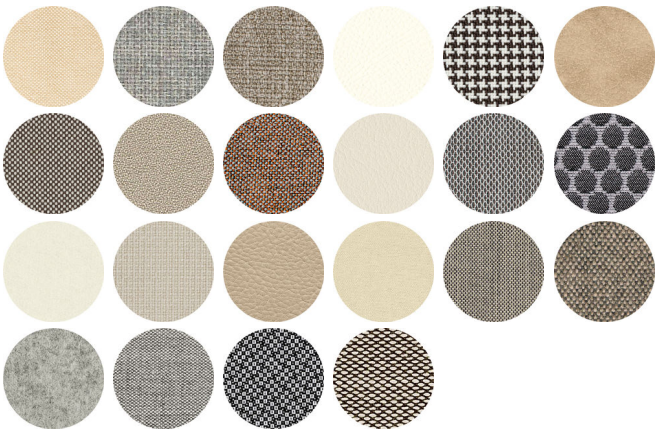

FRAMES

AC STEEL

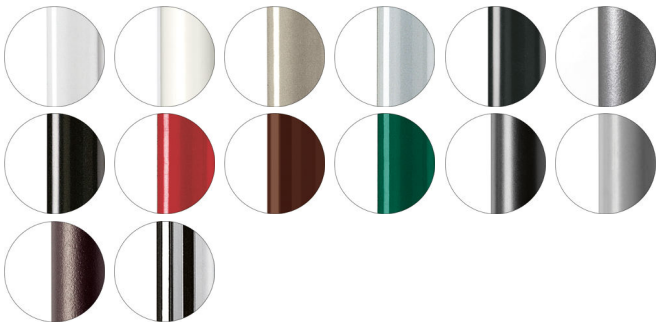

USES

coffee & restaurants, hotels, educational, entertainment, travel, office and waiting areas, retail, health care,

Abaco

Rdm

metalmobil

Abaco 760

ABACO COLLECTION:
Abaco 750, Abaco 751, Abaco 752, Abaco 753, Abaco 754, Abaco 755, Abaco 756, Abaco 757, Abaco 758, Abaco 759, Abaco 760, Abaco 761,

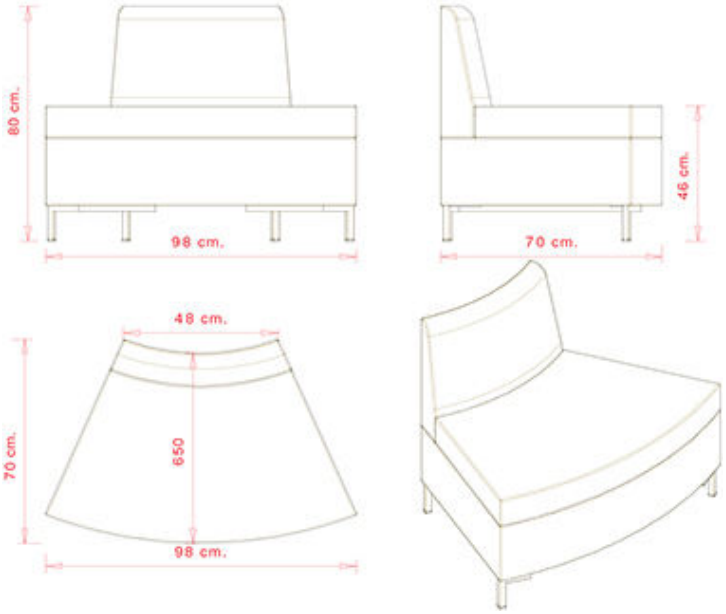

Modular seating system. Upholstered seat and back. Steel frame. Curved module 45° opened.

WEIGHT	PACK	PIECES PER BOX
27,5 Kg	0,60 m^3	1

FINISHES SEATING

TE FABRICS

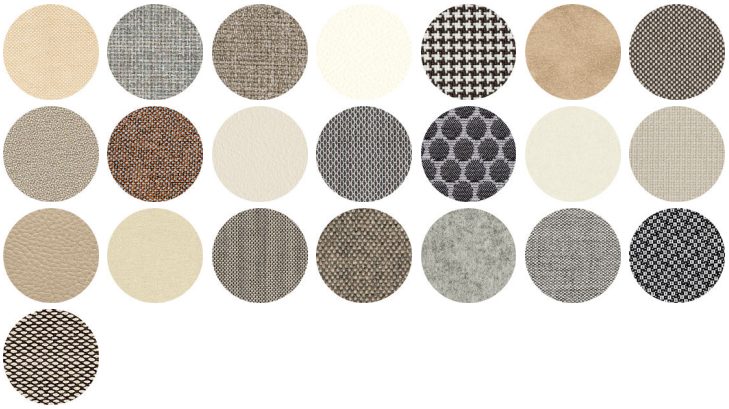

FRAMES

AC STEEL

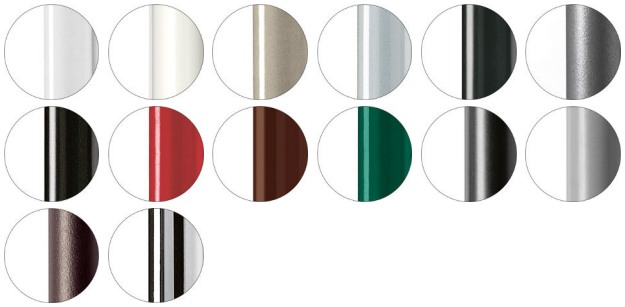

USES

coffee & restaurants, hotels, educational, entertainment, travel, office and waiting areas, retail, health care,

Abaco

Rdm

metalmobil

Abaco 761

ABACO COLLECTION:
Abaco 750, Abaco 751, Abaco 752, Abaco 753, Abaco 754, Abaco 755, Abaco 756, Abaco 757, Abaco 758, Abaco 759, Abaco 760, Abaco 761,

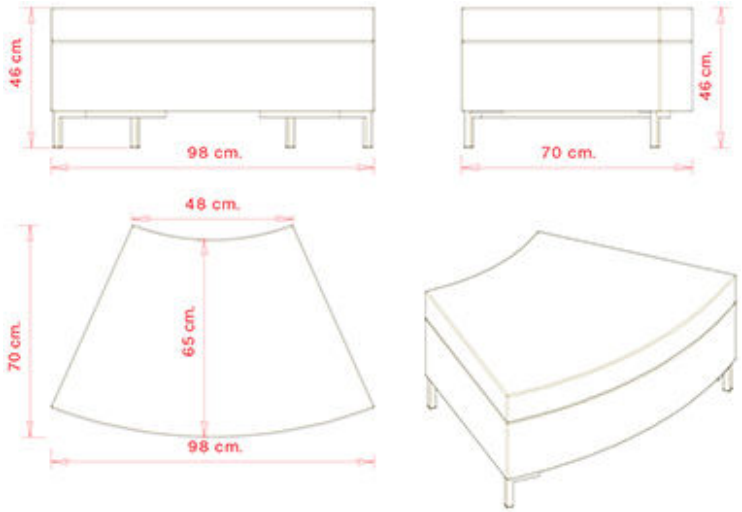

Modular seating system. Upholstered seat. Steel frame. Curved pouf module 45° opened/ closed.

WEIGHT	PACK	PIECES PER BOX
19 Kg	0,35 m^3	1

FINISHES SEATING

TE FABRICS

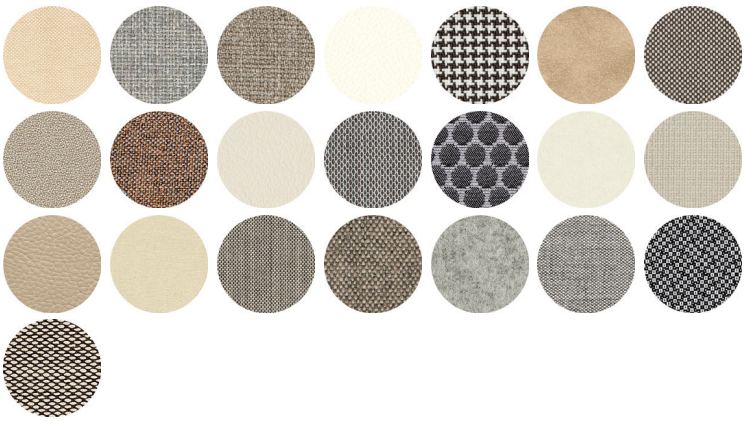

FRAMES

AC STEEL

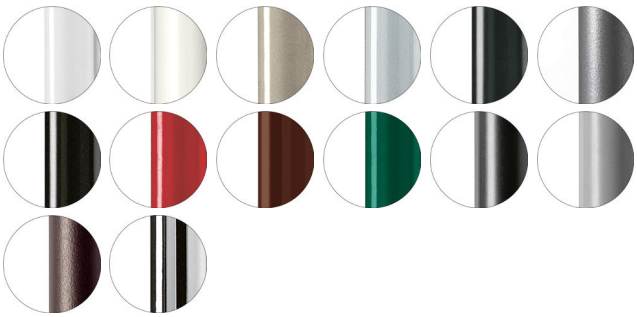

USES

coffee & restaurants, hotels, educational, entertainment, travel, office and waiting areas, retail, health care,