OUT

EDIPO
05-9149-18-AA

The photograph may not match the reference exactly. Please read the product description to identify the finish.

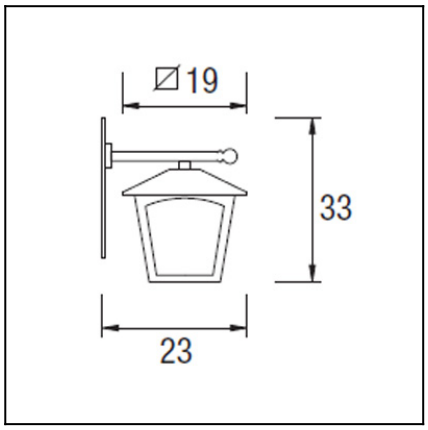

Download photometric file .ldt /.ies

TECHNICAL CHARACTERISTICS

Type:	Wall fixture
IP Protection degrees:	IP23
Lampholder:	1 x E27
Power (W):	E27 MAX 100W
Total power consumption (W):	100
Voltage / Frequency:	230V/50-60Hz
Warranty (Years):	2
Units per box:	6
Net Weight (Kg):	1.26
EAN:	8435111035412

MATERIALS / FINISHES

Structure material:	Injected aluminium	**Diffuser material:**	Glass
Structure finish:	Oxide brown	**Diffuser finish:**	Rustic

Leds-c4 reserves the right to make the necessary technical changes they deem adequate, in order to improve the features of the product.
Please consult the sales team to clarify any doubt.

(+34) 973 468 100
leds-c4@leds-c4.com
www.leds-c4.com

OPTIONAL ACCESORIES

71-9405-M3-M3

Structure material:	Polycarbonate
Structure finish:	Matt

IP65

Leds-c4 reserves the right to make the necessary technical changes they deem adequate, in order to improve the features of the product.
Please consult the sales team to clarify any doubt.

(+34) 973 468 100
leds-c4@leds-c4.com
www.leds-c4.com

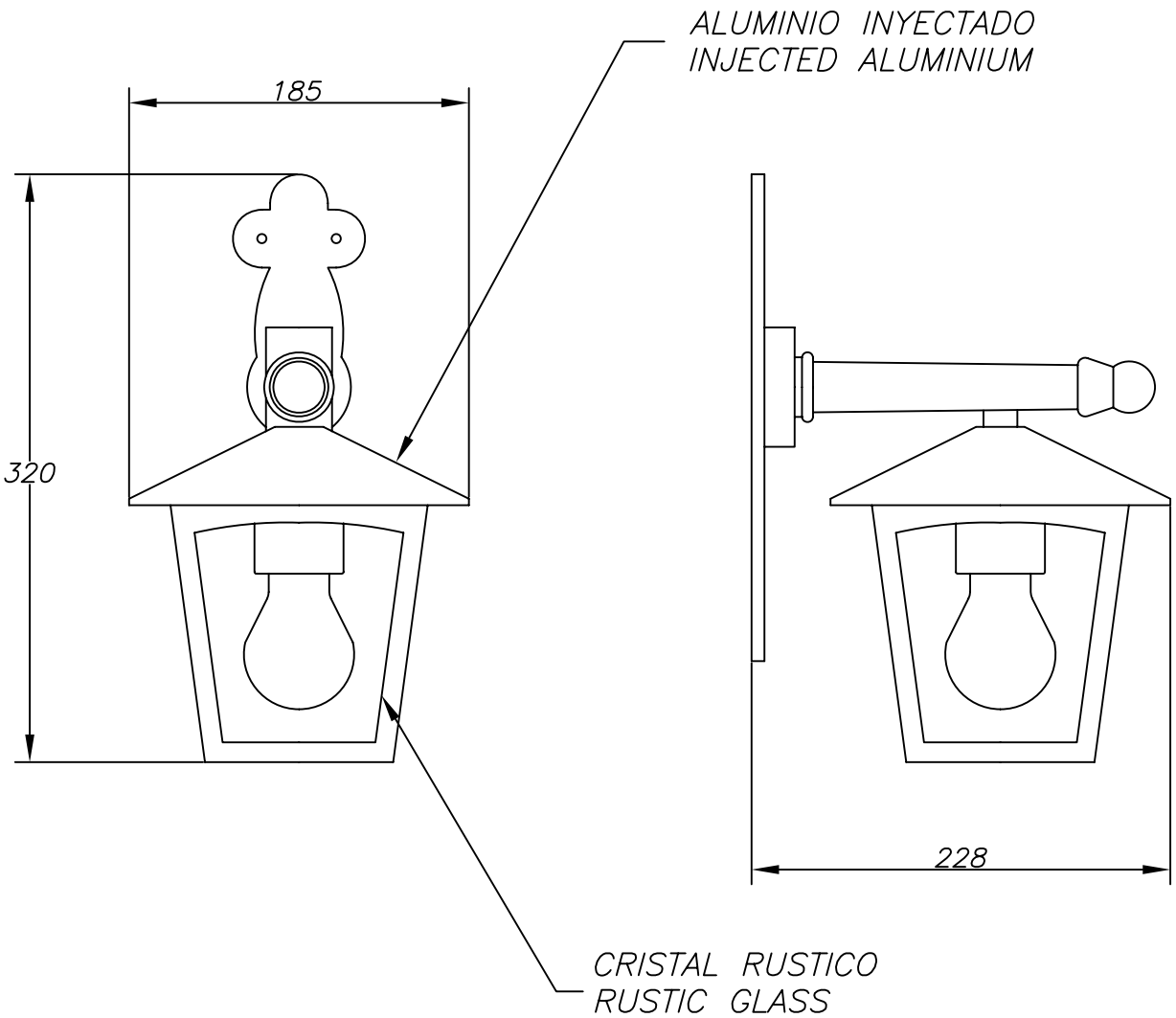

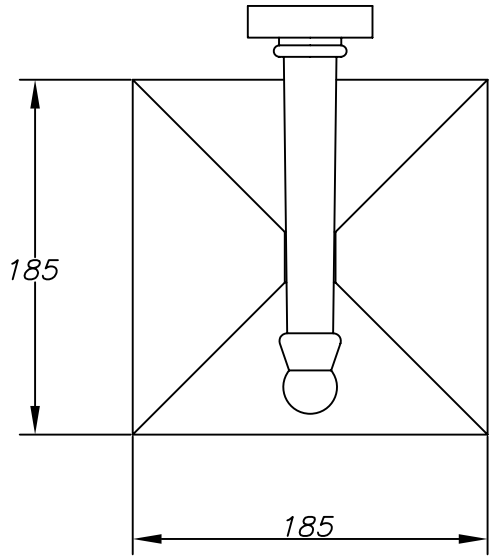

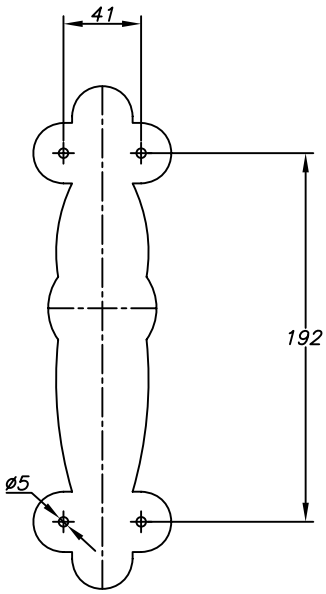

PLANTILLA DE INSTALACIÓN
INSTALLATION TEMPLATE

LEDS-C4

OUTD

1

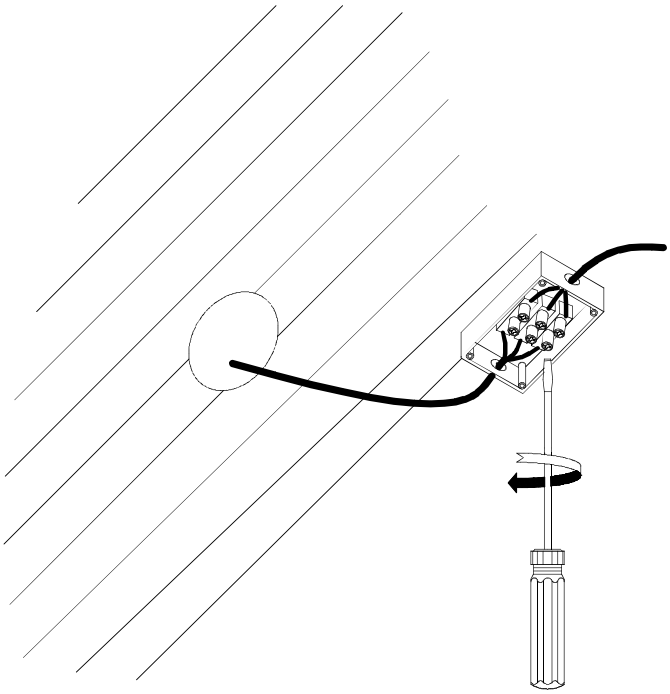
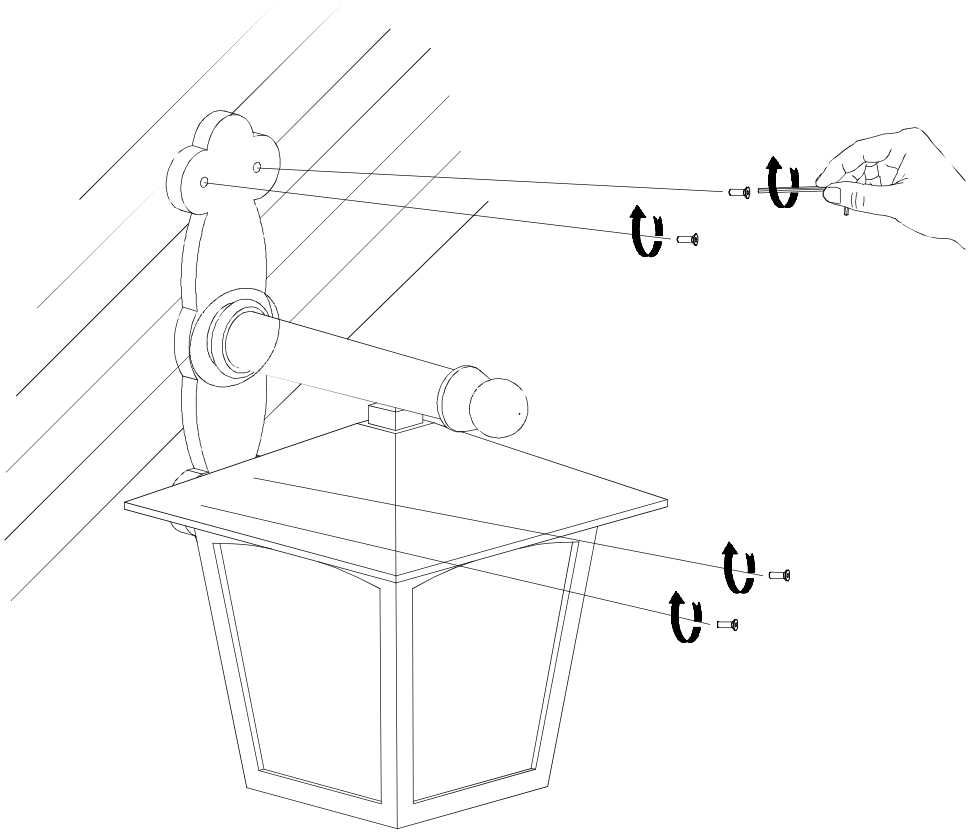
3