OUT

HEBE
05-9238-34-M3

The photograph may not match the reference exactly. Please read the product description to identify the finish.

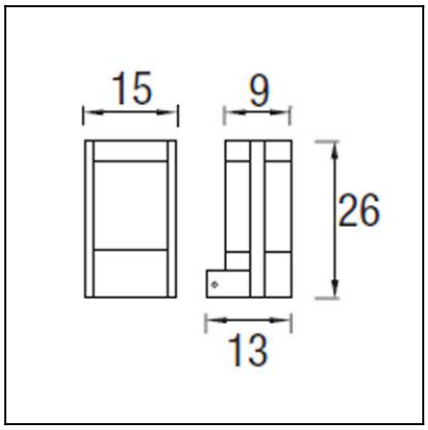

TECHNICAL CHARACTERISTICS

Type:	Wall fixture
IP Protection degrees:	IP44
Lampholder:	1 x E27
Power (W):	E27 MAX 100W
Total power consumption (W):	100
Voltage / Frequency:	230V/50-60Hz
Warranty (Years):	2
Units per box:	6
Net Weight (Kg):	1.165
EAN:	8435111049372

E27 stand.

ENERGY SAVING

MATERIALS / FINISHES

Structure material:	Injected aluminium	**Diffuser material:**	Polycarbonate
Structure finish:	Grey	**Diffuser finish:**	Matt

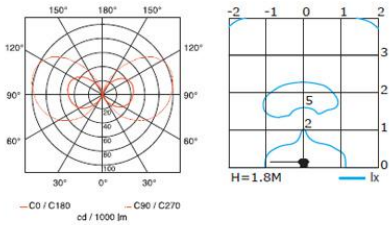

Download photometric file .ldt /.ies

Leds-c4 reserves the right to make the necessary technical changes they deem adequate, in order to improve the features of the product.
Please consult the sales team to clarify any doubt.

(+34) 973 468 100
leds-c4@leds-c4.com
www.leds-c4.com

Luminaria		**Ensayo**		**Lámpara**	
Código	05-9238-34-M3	Código	55-9238-34-M3	Código	DLX EL LL 15W827E27
Nombre	Aplique HEBE 15W TC-DEL E27	Nombre	Baliza HEBE 15W TC-DEL	Número	1
Familia	- LEDS-C4	Fecha	21-11-2008	Posición	UNIVERSAL

Eficiencia	73.79%	Sist. de Coorden.	C-G	Flujo Total	900.00 lm
Valor Máximo	103.27 cd/klm	Posición	C=105.00 G=105.00	Sim. en los planos 0-180	

160mm x 140mm

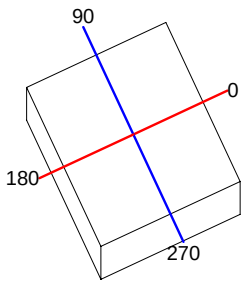

Semiplanos C

180.0 — 0.0

270.0 — 90.0

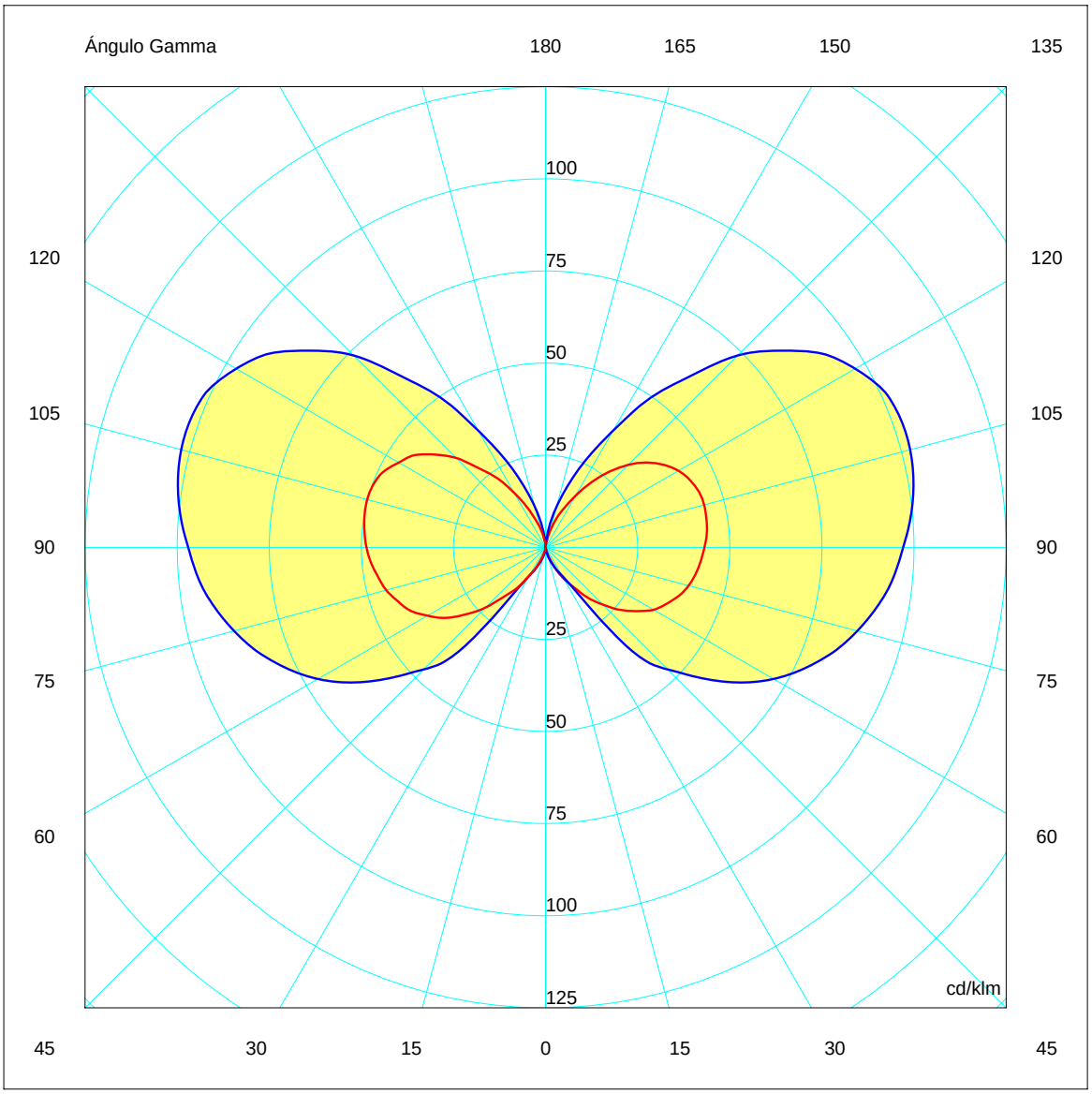

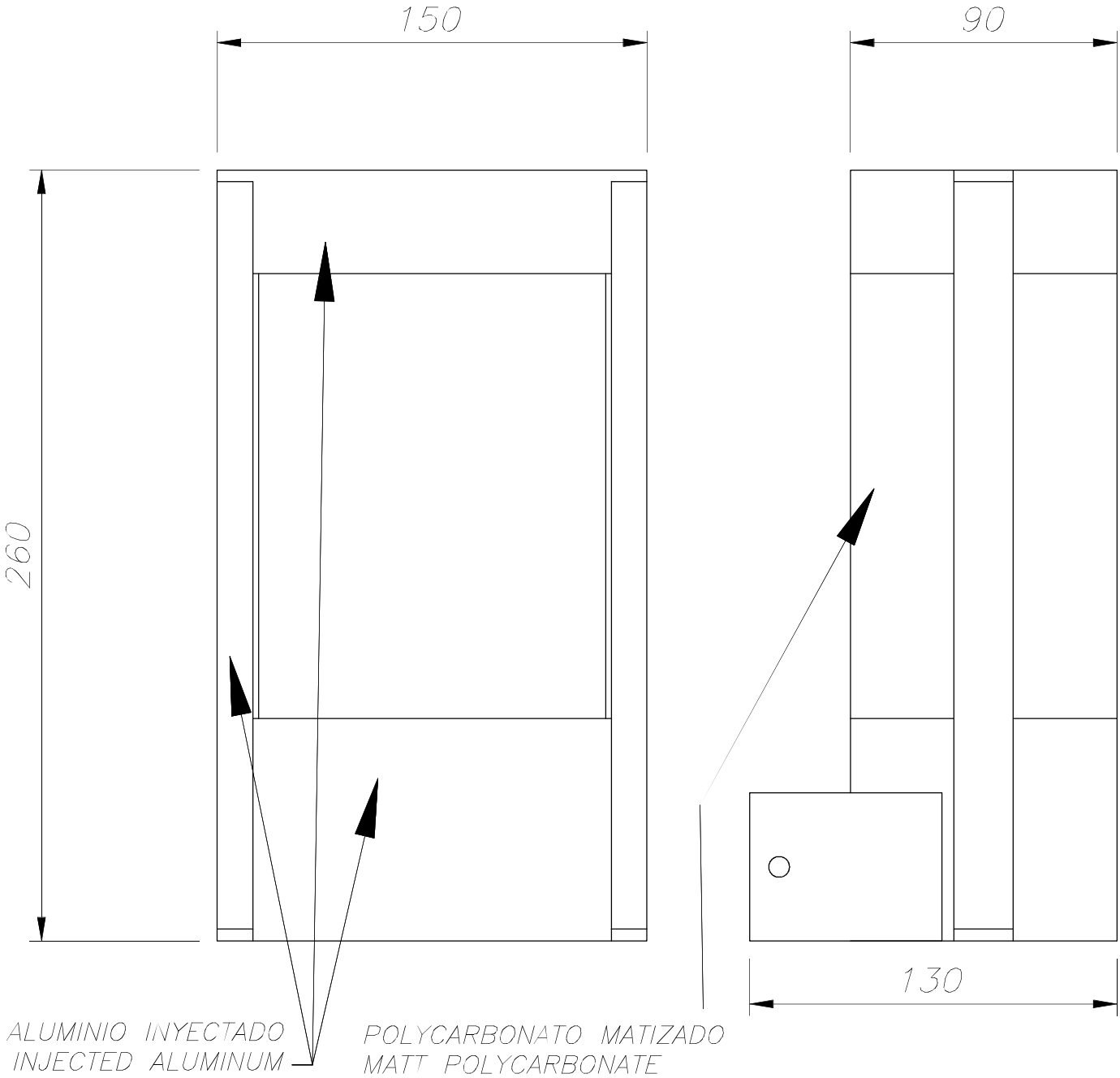
150
90
260
130
ALUMINIO INYECTADO
INJECTED ALUMINUM
POLYCARBONATO MATIZADO
MATT POLYCARBONATE

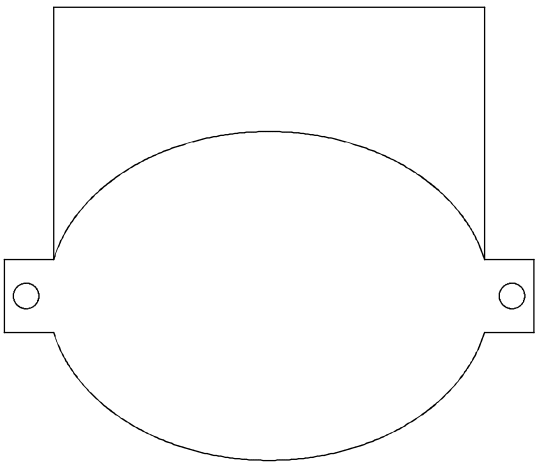

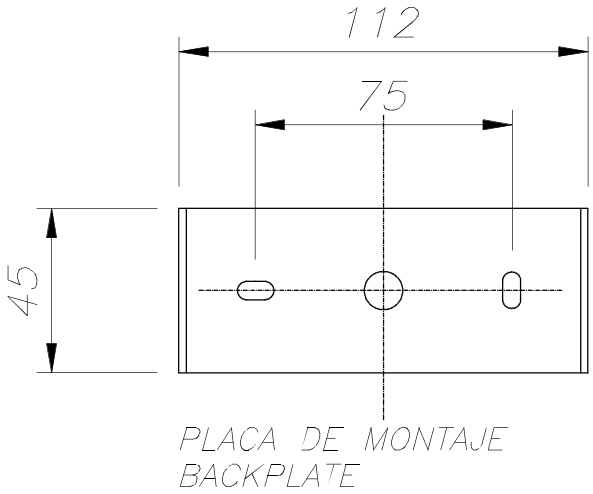
112
75
45
PLACA DE MONTAJE
BACKPLATE

LEDS-C4
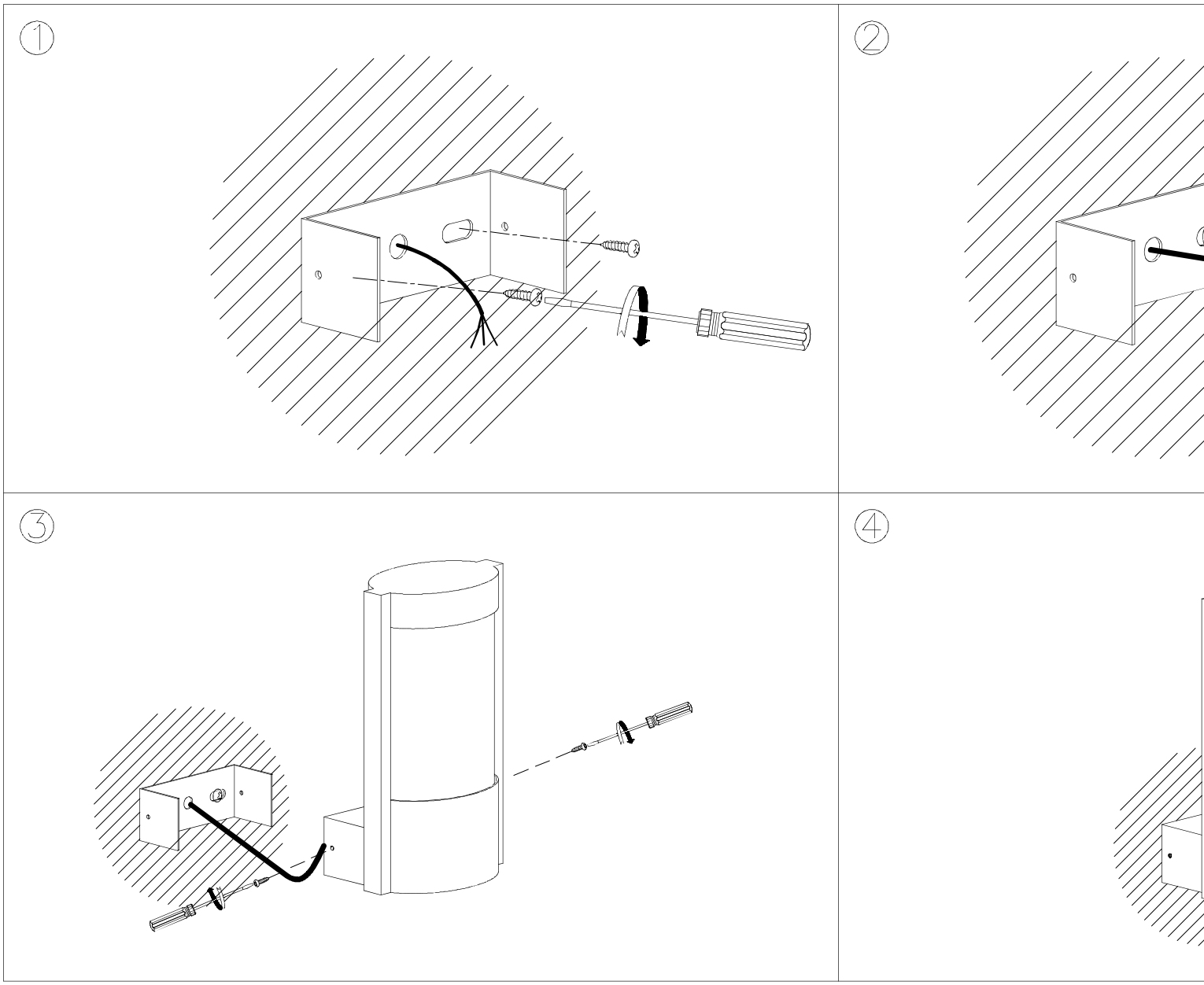
OUTDOOR