OUT

COSMOS
15-9365-34-T2

The photograph may not match the reference exactly. Please read the product description to identify the finish.

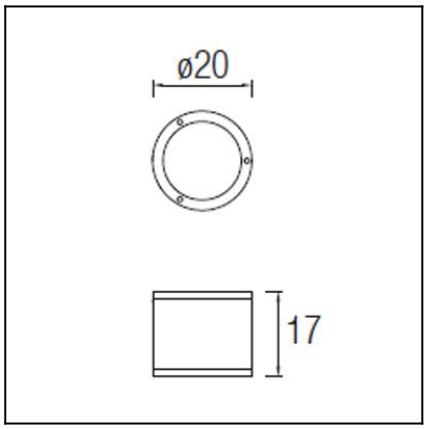

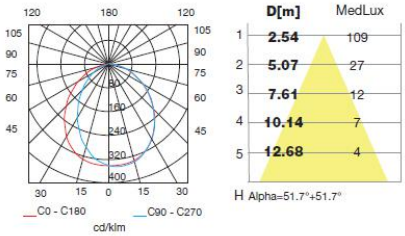

Download photometric file .ldt /.ies

DESCRIPTION

Curved edge light unit. Frosted glass diffuser and injected aluminium body. Available in light grey and dark grey. Light source uses two GX24d-3 26W fluorescent lamps (not supplied). Includes BAG electronic fittings.

TECHNICAL CHARACTERISTICS

Type:	Ceiling fixture
IP Protection degrees:	IP65
IK Protection degrees:	IK08
Lampholder:	2 x GX24d3
Power (W):	GX24d3 26W
Voltage / Frequency:	230V/50Hz
Warranty (Years):	2
Units per box:	2
Net Weight (Kg):	3.03
EAN:	8435111069448

MATERIALS / FINISHES

Structure material:	High purity aluminium	**Diffuser material:**	Glass
Structure finish:	Grey	**Diffuser finish:**	Sandblasted

GEAR

Gear included: Yes, Magnetic

Leds-c4 reserves the right to make the necessary technical changes they deem adequate, in order to improve the features of the product.
Please consult the sales team to clarify any doubt.

(+34) 973 468 100
leds-c4@leds-c4.com
www.leds-c4.com

Luminaria		**Ensayo**		**Lámpara**	
Código	15-9365-34-T2	Código	15-9365-34-T2	Código	PL-T26W/830/2P
Nombre	Uplight COSMOS 2x26W TC-T opal	Nombre	Uplight COSMOS 2x26W TC-T opal	Número	2
Familia	- LEDS-C4	Fecha	03-09-2009	Posición	Universal
Eficiencia	22.49%	Sist. de Coorden.	C-G	Flujo Total	3600.00 lm
Valor Máximo	345.93 cd	Posición	C=90.00 G=5.00	Sim. en los planos	270-90

Diam=200mm

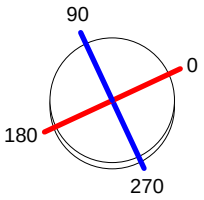

Semiplanos C

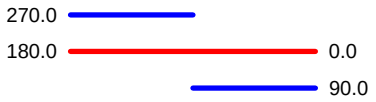

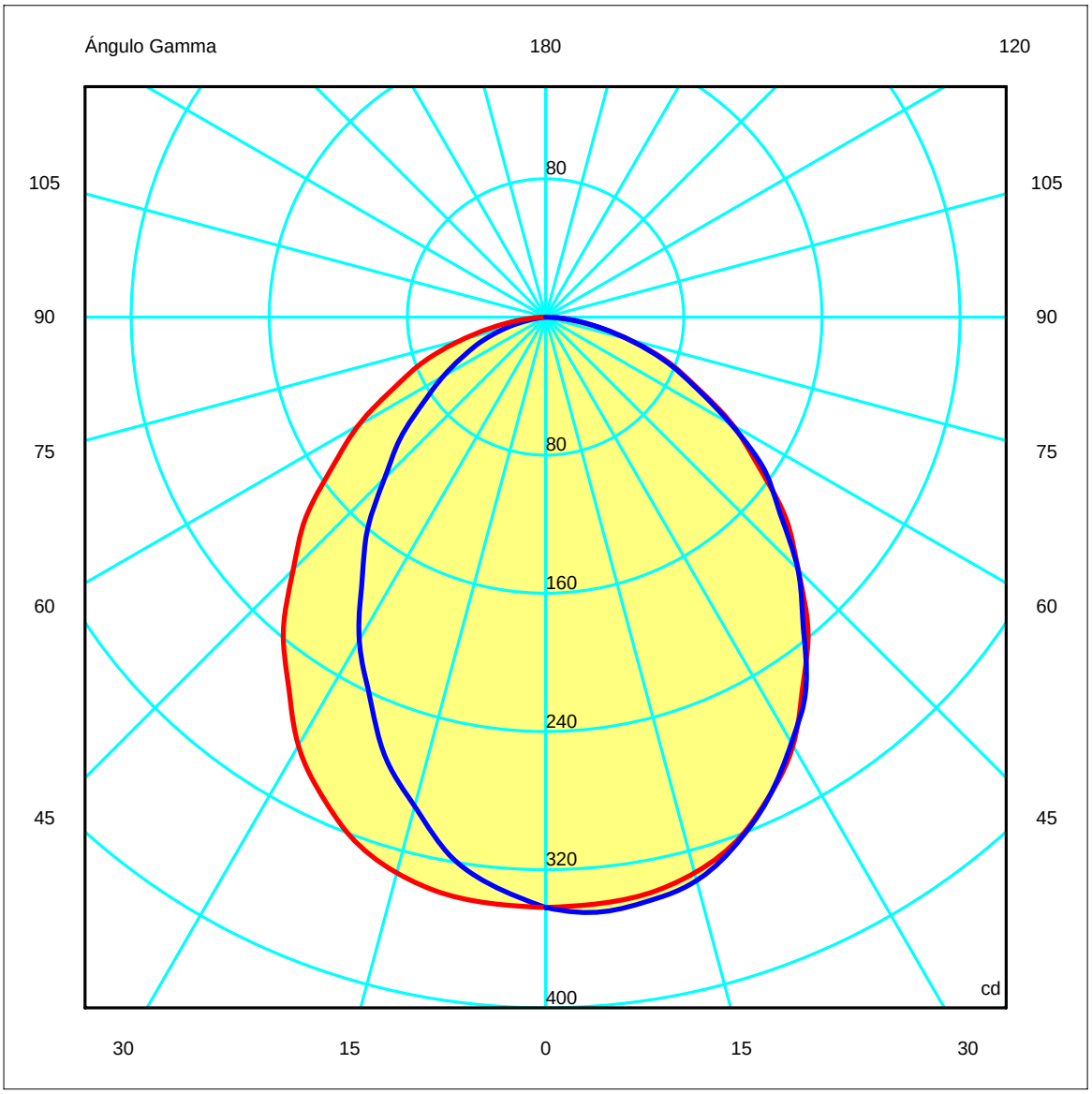

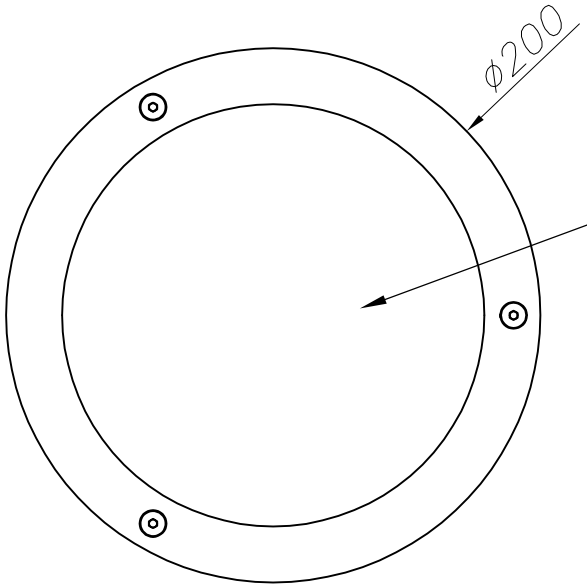

CRISTAL TRANSPARENTE
TRANSPARENT GLASS

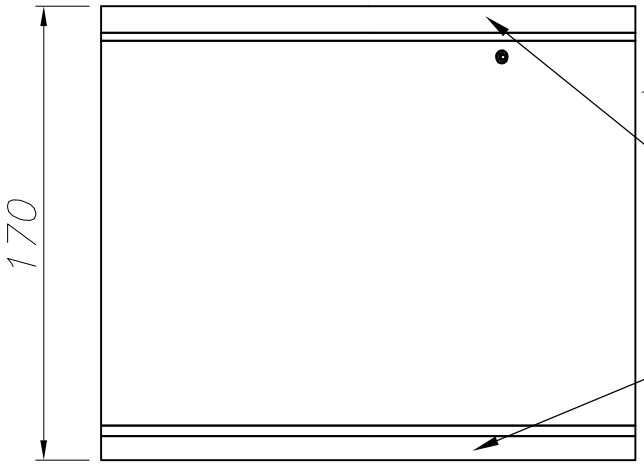

ALUMINIO EXTRUIDO
EXTRUDED ALUMINUM

ALUMINIO INYECTADO
INJECTED ALUMINIUM

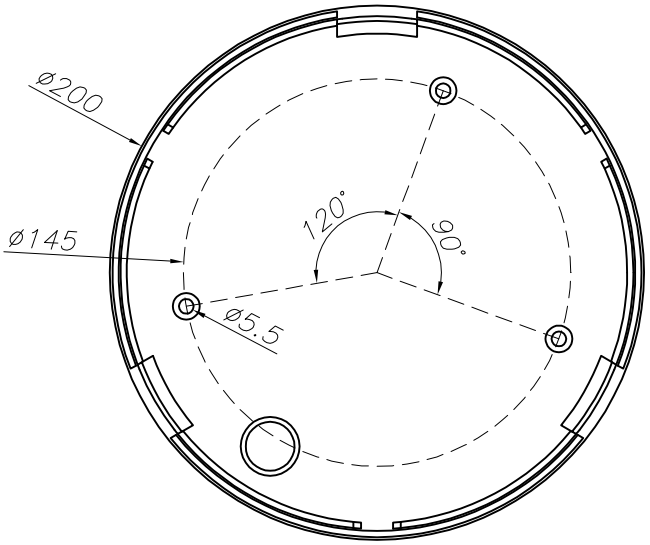

PLANTILLA DE INSTALACIÓN
INSTALLATION TEMPLATE

OUTDOOR

15-9365

①

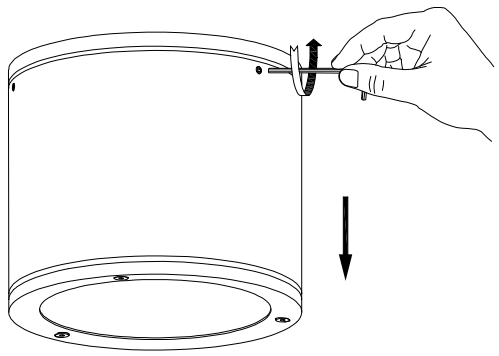

②

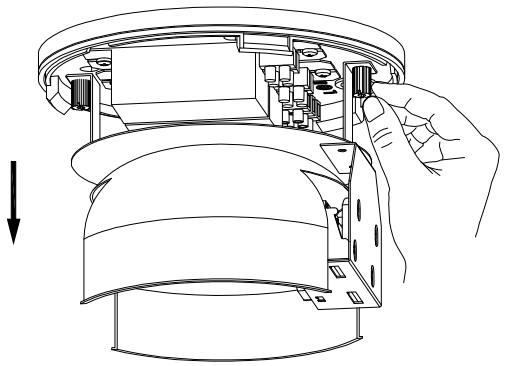

③

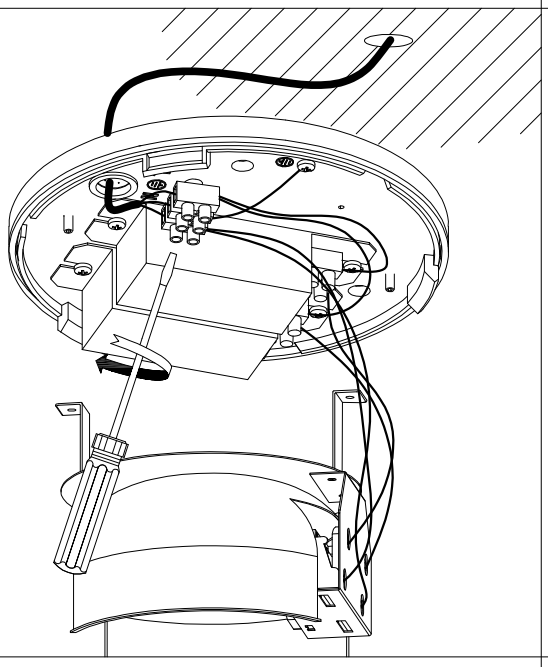

④

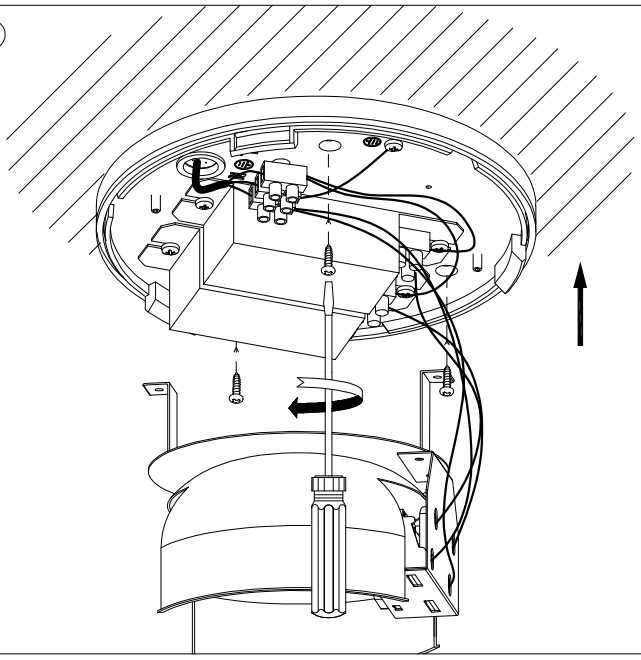

⑤

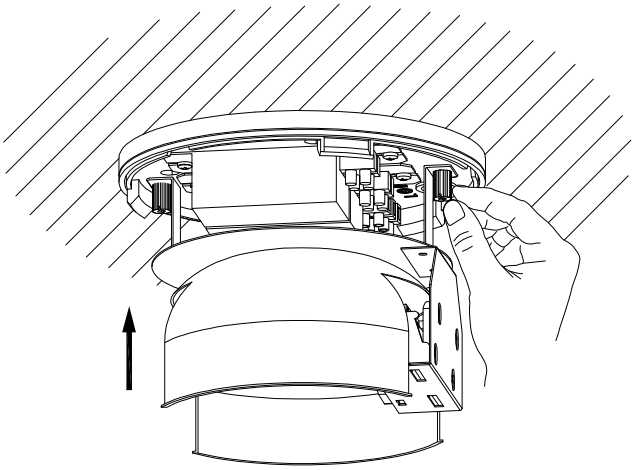
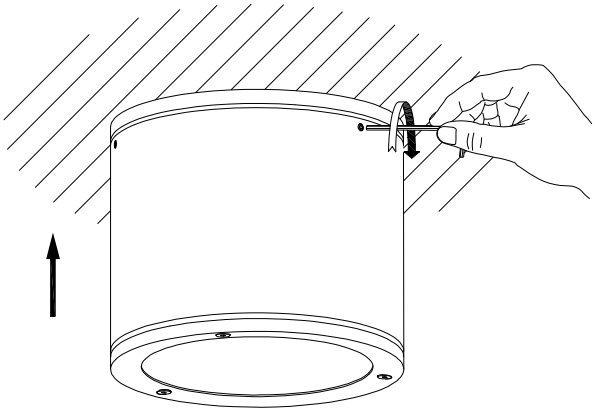
⑥